Wearable Technology

By Shariffah Nur Alawiyah

Table of Contents

01

Introduction

What is wearable? What are the types?

02

Personal Style

What do I like and how does it influence my choices?

03

Designers

Which designers excites me?

04

Innovative Tech

Different technologies that are available

01

Introduction

What is Wearable Tech & why is it important?

What is it?

Wearable Technology are electronic devices that can be word as accessories, embedded in clothing, implanted in user's body or even tattooed on skin.

Devices are hands-free gadgets, powered by microprocessors and internet connection. It enhances the ability to send & receive data.

Types of Wearables - Jewelry

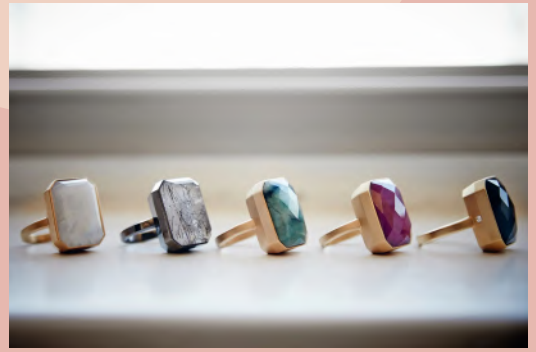

Ringly
By Christiana Mercando

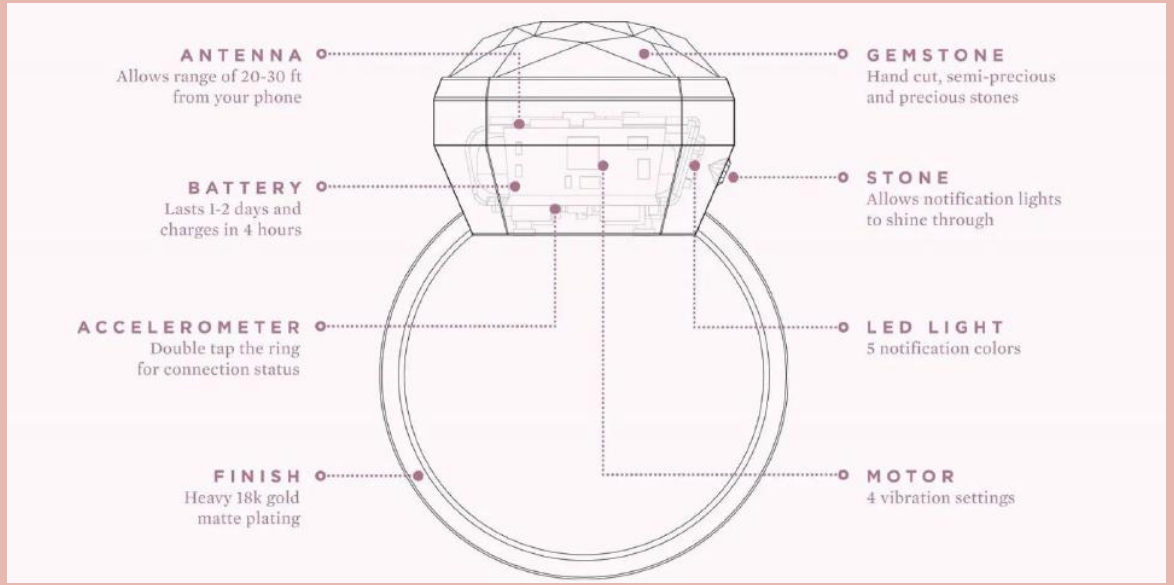

Cocktail ring
Connects to smartphone
Send notifications with vibrations & light

Types of Wearables - Fitness Trackers

PowerWatch
By Akram Boukai

Smartwatch powered by sunlight & body heat
Measures all aspects of health
Tracks skin temperature with thermoelectric technology
Records metrics (eg. Calories, heart rate, sleep, etc)

Types of Wearables - Microchips

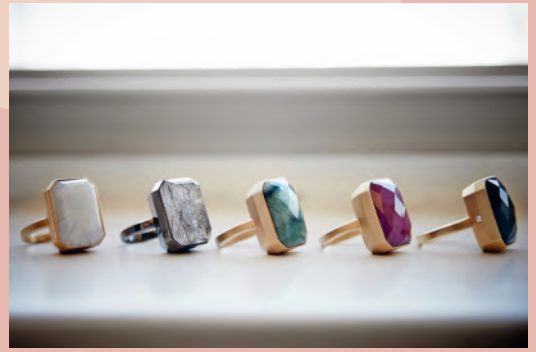

Ringly

Cocktail ring
Connects to smartphone
Send notifications with vibrations & light

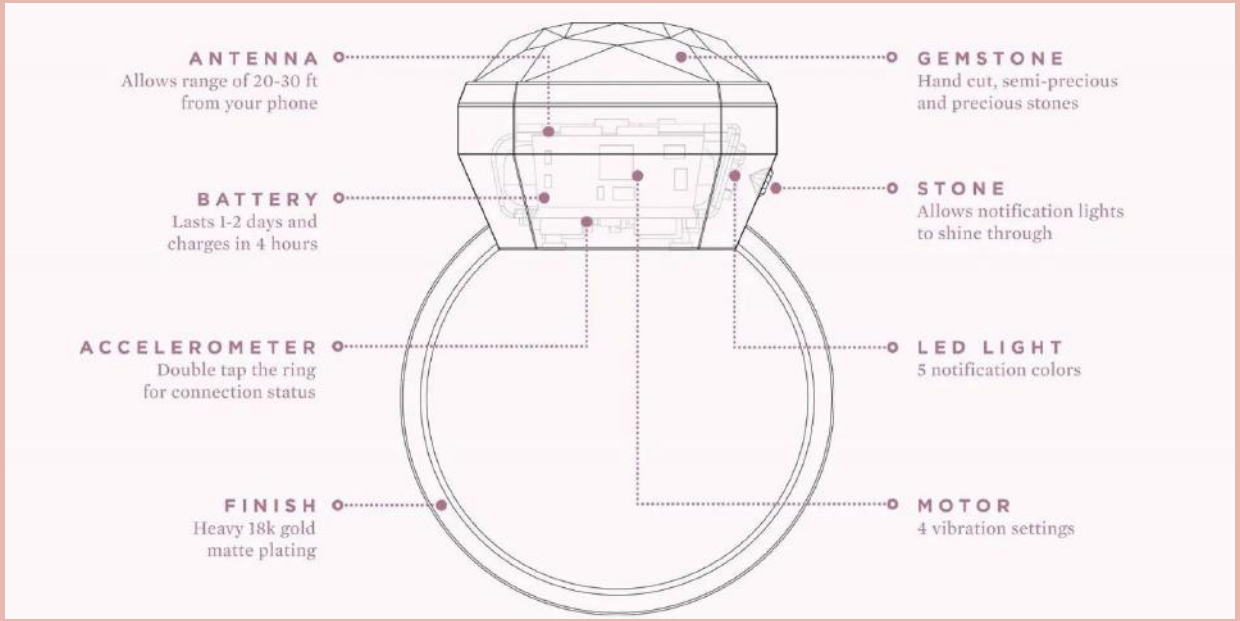

Types of Wearables - Safety Wearables

Keychain

Sticky platform

Clip

Necklace

Bracelet

HelpyHero

By Sergio Rivera & Marc Le Guen

Adaptable wearable holders
Personal Safety Device
Sends alert to family & friends with GPS
Real-Time Video Recording
Speaker & Microphone to speak to contact
Send alert to emergency hotlines

Types of Wearables - Stick ons

iTBra
By Rob Royea
CEO of Cyrcadia Asia

Smart wearable bra insert
Early breast cancer detection
Worn 2 hours a month to detect circadian temperature changes in breast tissue
Launched in Asia as dense tissue in breasts are more prevalent in Asian women; more likely to develop tumour

Types of Wearables - Fabric/Textiles

Levi's Commuter Trucker Jacket with Jacquard by Google
By Levi's & Google

Video to share

Touch & Gesture interactivity woven into sleeve
Paired with phone allows for connection to control music, navigations & stay in contact without having to reach for phone

Why is it important?

Medicine/ Healthcare

Life-altering benefits in recording & monitoring health data for future use & knowledge or danger alerts.

IoT & Economic Progression

Storage of data helps future decision making and promote economic growth with vast information.

Safety

Danger Alerts, Reminders, Quick action functions for users.

Expression

Promotes freedom of expression & encourage sharing of knowledge & experiences amongst users & creators.

02

Personal Style

What is my personal style & how does it influence my choices?

I like....

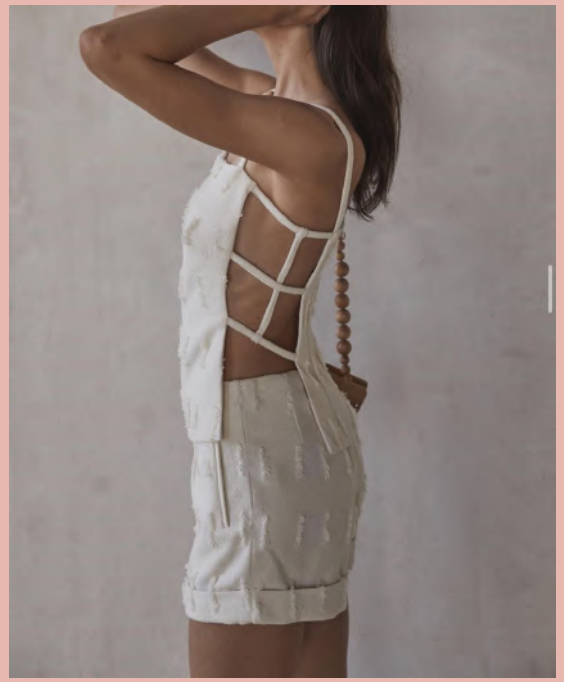

Structure, Flowy Silhouettes, Bodices

&...

Culture-Infused Pieces

- Source of inspiration
- Gear towards specific colour palettes & patterns
- Incorporation of personality into design
- Using choices as a form of communication
- Possibly reflect your state of mind

Influence

03

Designers

Who excites me and why?

Zuhair Murad

Haute couture with cultural influences and exclusive luxury wear

Structured

Intricate Details

Heavy Embellishments

Panelling

Mix of textiles

Fit & Flare

Small details in pieces are creative

2415

Prototype tech-street-wear for the future catered to youths

App-Connected

Change fibre-optic colour/design

Personalised

Animate to music (sync with beat)

Ying Gao

Combines fashion, product & media design & architecture

Autonomous dresses

Ripple, expand, contract motions

Uses colour & light sensors & tiny cameras linked to raspberry PI computer to gather information

Data activates series of actuators & magnets interlaced with silicone

04

Innovative Tech

Some interesting tech &
its uses

What's available?

Technology	Used for	Example
UV Sensor	Detection of UV levels	Neviano Swimsuits Monitors temperature & provide warnings and reminders to wear sunscreen
Bio-Ceramic Material emits and reflects Far-Infrared Fiber	Promote blood circulation, accelerate microcirculation & thermal insulation.	Under Armour Athlete recovery sleepwear
Stretch Sensors	Tension or Bending	Aeolia Knitwear Produces sound feedback with surroundings
BONUS - not tech Hexagonal Cooling Pads	Provides comfortable & effective cooling relief	The Hail Ice Pack Hydrogel designed to fit contours of body

Link to share

Examples

UV Sensor

Bio-Ceramic Material

Stretch sensors

Hail Ice Pack

Thanks for listening!

Please keep this slide for attribution.

CREDITS: This presentation template was created by Slidesgo, including icons by Flaticon, and infographics & images by Freepik.

Icons

Reference Links

https://laughingsquid.com/ringly-a-stylish-cocktail-ring-that-connects-with-a-smartphone-to-send-notifications-with-vibrations-and-light/

https://www.scmp.com/lifestyle/health-wellness/article/2180728/hi-tech-itbra-breakthrough-asian-women-high-risk-breast

https://www.powerwatch.com/

https://interestingengineering.com/smart-clothing-is-the-future-of-the-wearables-industry

http://global.levi.com/jacquard/jacquard-with-buy-link.html

https://www.indiegogo.com/projects/helpyhero-personal-safety-device#/

https://www.middleeastmonitor.com/20180221-arab-fashion-rocks-the-runway-at-london-fashion-week/

http://www.zuhairmurad.com/en/craftsmanship

https://www.forbes.com/sites/rachelarthur/2017/09/21/streetwear-wearable-tech/#33287a886113

Reference Links

https://www.toptal.com/designers/ui/the-psychology-of-wearables

https://www.42gears.com/blog/6-wearable-technologies-you-must-know-right-now/

https://www.lifewire.com/best-smart-clothes-4176104

https://www.scientific.net/AMR.785-786.573

https://www.dezeen.com/2019/10/28/flowing-water-standing-time-ying-gao-chameleon-autonomous-dress-fashion/

https://www.wired.co.uk/article/twentyfour15-shocks-nobody-at-london-fashion-week

https://spinhandspun.wordpress.com/2010/01/28/aeolia-knitwear-incorporates-stretch-sensor-technology/

Resources

Did you like the resources on this template? Get them for free at our other websites:

PHOTOS

- Happy woman in grey holding hands on hair with garland
- Bride getting ready
- Bride with wedding dress
- Bride with wedding dress
- Young girl with straight
- Blonde girl taking care of her hair
- Woman holding flowers back view
- Crop stylist using hairdryer and brush
- Hairstylist making curls for young woman
- [illegible] overhead view of a smiling young [illegible] an covering her eye with hand lying [illegible] d
- Background design with pattern collection

ICONS

- Hairdressing & Barber Shop Icon Pack

slidesgo